United States Patent [19]

de Cuadros

[11] **Patent Number: 5,046,203**

[45] **Date of Patent: Sep. 10, 1991**

[54] **COLLAPSIBLE HAMMOCK SUPPORT**

[76] Inventor: **Graciela V. O. de Cuadros,** 53-00 65 Place, Maspeth, N.Y. 11378

[21] Appl. No.: **582,413**

[22] Filed: **Sep. 14, 1990**

[51] **Int. Cl.**[5] **A45F 3/24**

[52] **U.S. Cl.** **5/128;** 135/95; 248/166

[58] **Field of Search** 248/166, 165, 163.2, 248/370; 272/85, 88, 86, 87; 5/127, 128, 129, 130, 114; 135/95, 106, 117

[56] **References Cited**

U.S. PATENT DOCUMENTS

235,809	12/1880	Price	5/130
781,609	1/1905	Lawson	5/127
1,011,789	12/1911	Hoffman	5/128 X
1,097,941	5/1914	Rector	5/128 X
2,251,298	8/1941	Spangler	5/128 X
2,353,220	7/1944	Charlop	5/128
4,229,845	10/1980	Cuadros	5/114
4,757,563	7/1988	An	135/95

Primary Examiner—J. Franklin Foss
Attorney, Agent, or Firm—Auslander & Thomas

[57] **ABSTRACT**

A collapsible hammock support that selectively receives a hammock. The hammock support includes a ground engaging hammock support frame assembly and a rotatably attached hammock shade support frame assembly. The shade support frame assembly can be disposed at various lateral dispositions to selectively orient a sunshade attached thereto.

9 Claims, 4 Drawing Sheets

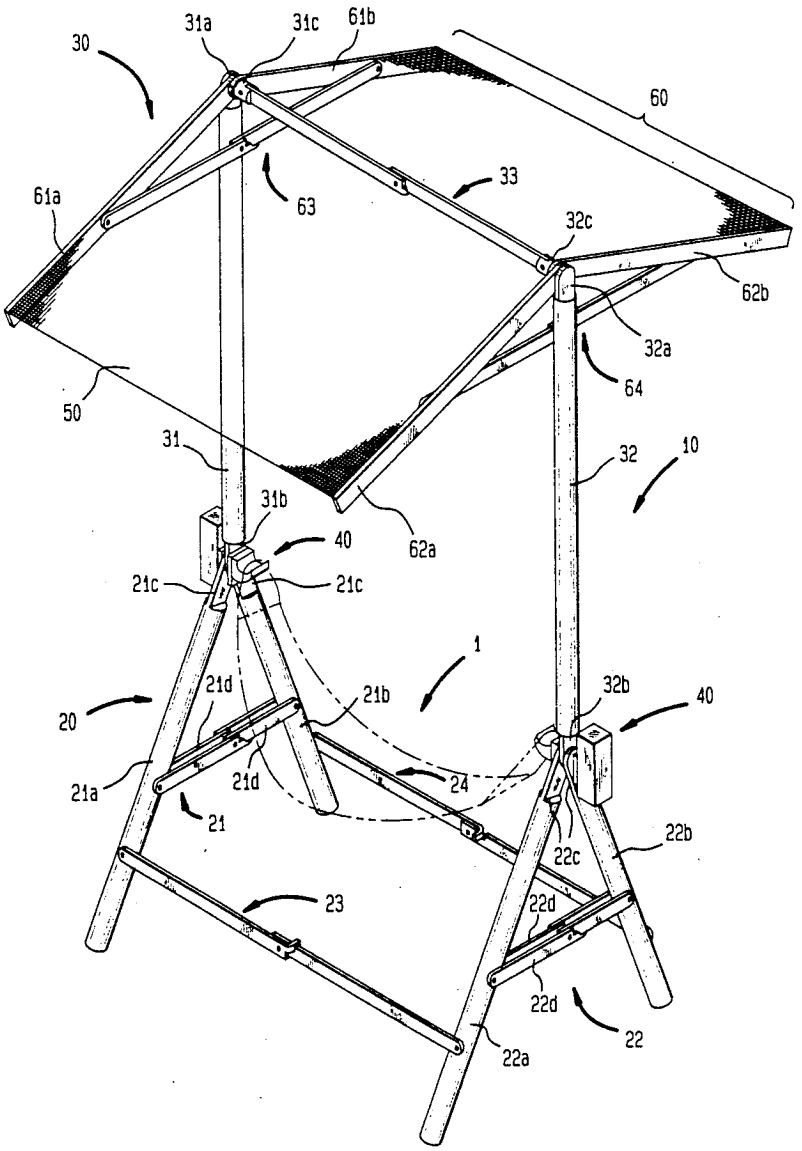

ClibPDF - www.fastio.com

FIG. 1

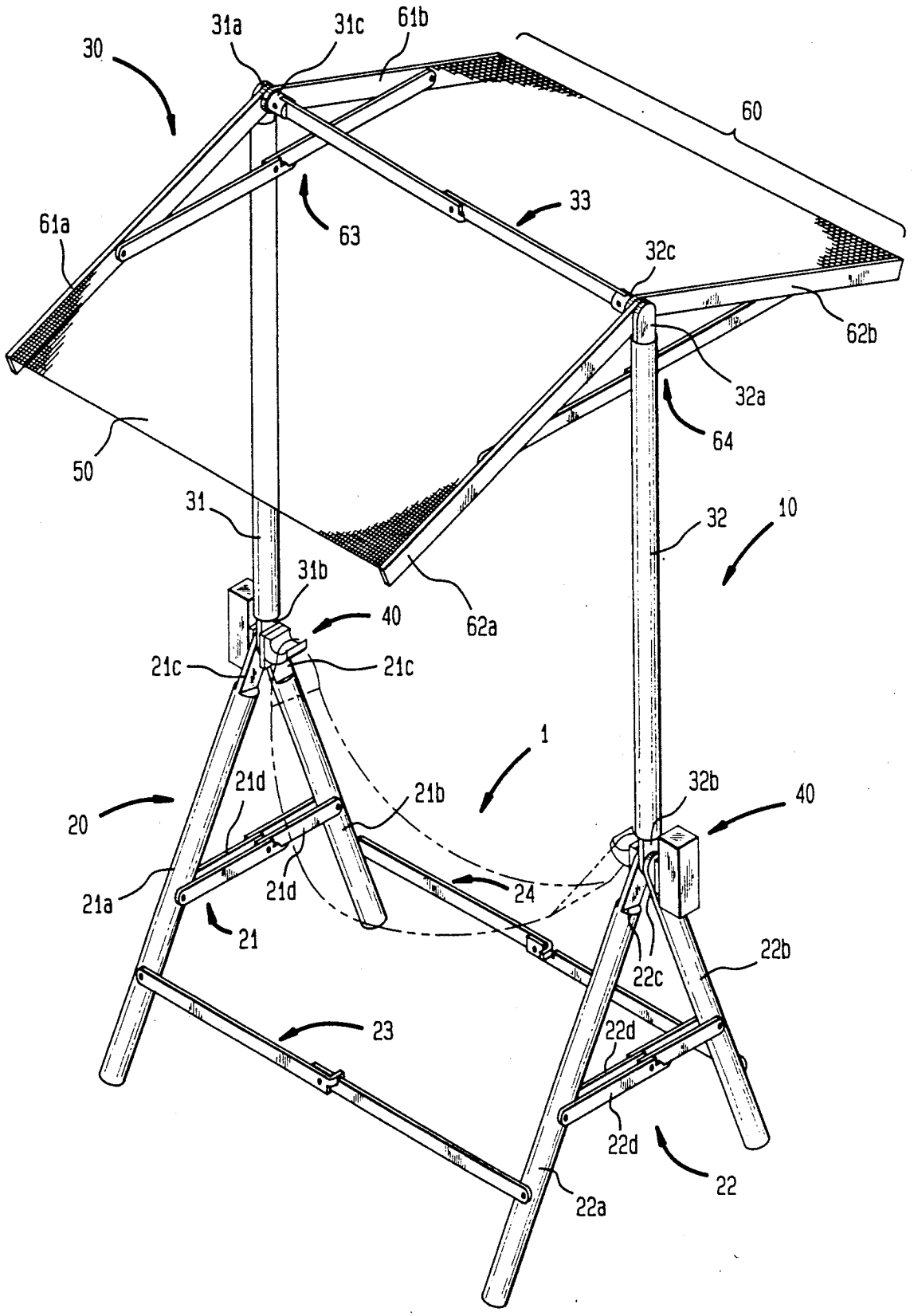

ClibPDF - www.fastio.com

FIG. 4

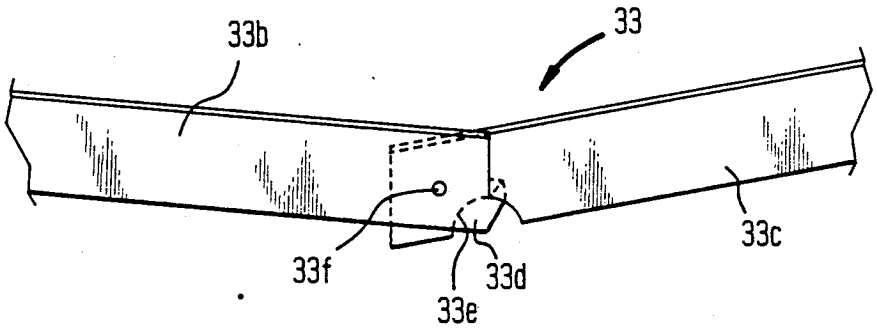

FIG. 5

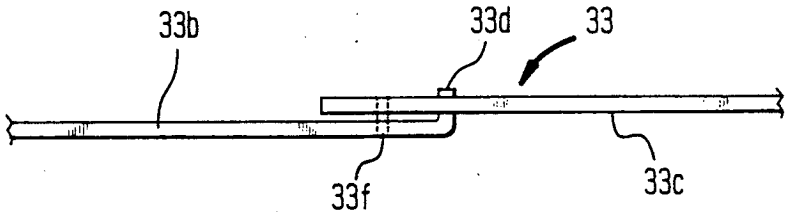

FIG. 6

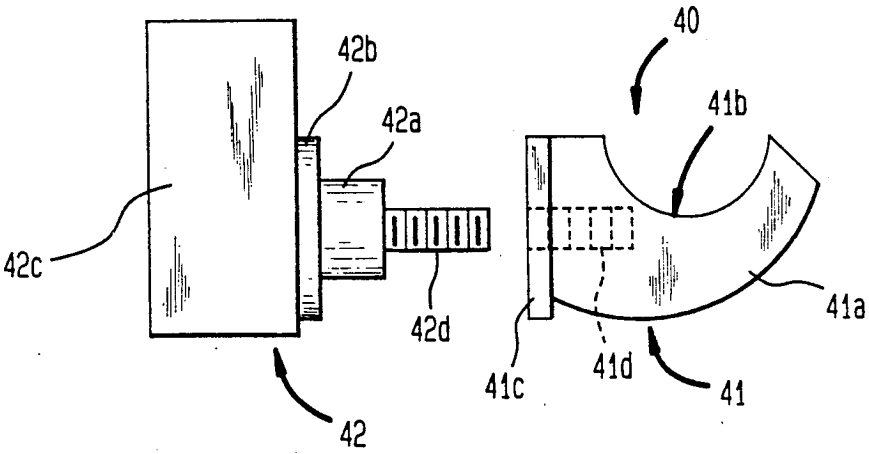

ClibPDF - www.fastio.com

FIG. 7

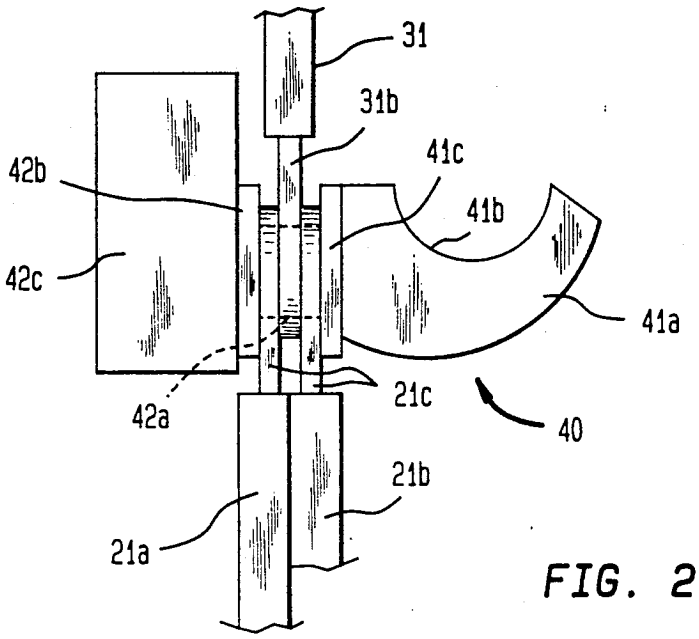

FIG. 2

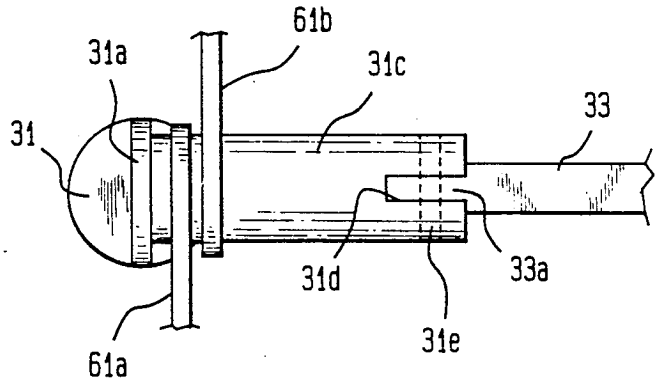

FIG. 3

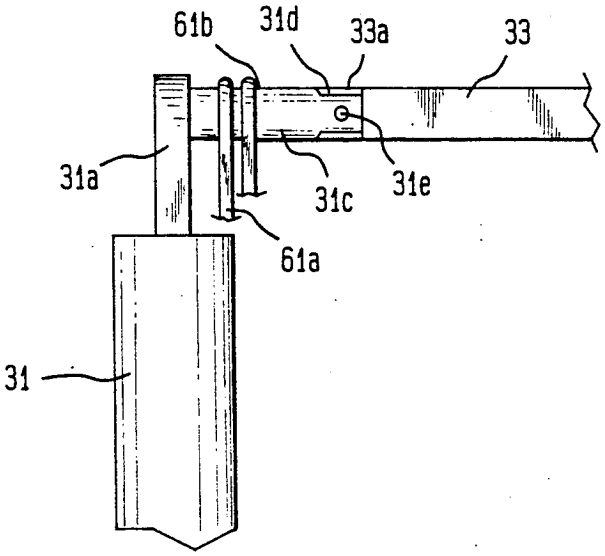

ClibPDF - www.fastio.com

FIG. 8

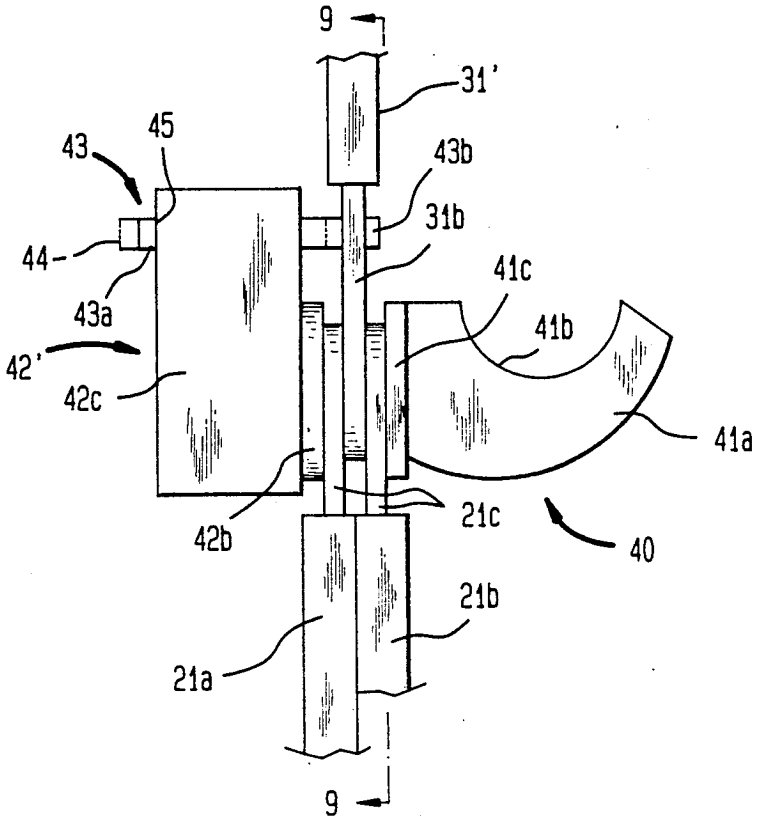

FIG. 9

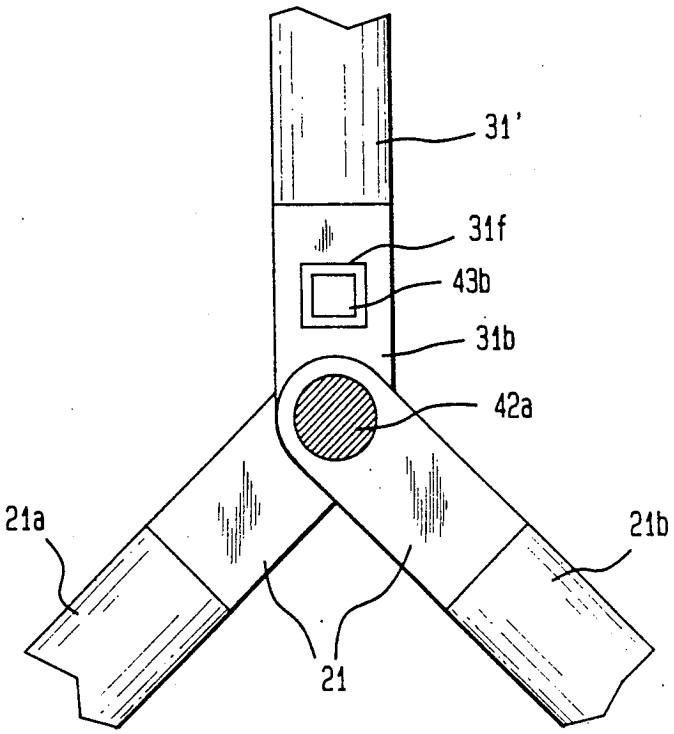

ClibPDF - www.fastio.com

COLLAPSIBLE HAMMOCK SUPPORT

BACKGROUND OF THE INVENTION

The present invention generally relates to a portable and collapsible support for a hammock. More specifically, the present invention relates to a collapsible hammock support having sun shading means.

In. U.S. Pat. No. 4,229,845 to the present applicant, a collapsible hammock support is disclosed, generally comprising first and second ground engaging support members having collapsible longitudinally extending bracing members and collapsible transversely extending bracing members disposed between the first and second ground engaging support members, and means for detachably connecting the respective ends of a hammock. The hammock support of the prior art does not provide collapsible means for shading a person seated or lying in the hammock. This limitation of the prior art collapsible hammock support is overcome by the present invention.

SUMMARY OF THE INVENTION

The present invention is a collapsible hammock support having collapsible sun shading means pivotally attached to the top portion of collapsible hammock support means. The hammock support generally comprises a collapsible hammock support frame assembly, a collapsible hammock shade support frame assembly having a sun shade attached thereto, means to pivotally attach the shade support frame assembly to the hammock support frame assembly at selective dispositions, and means to selectively attach a hammock to the hammock support.

The pivoting attachment means for the hammock shade support frame assembly and the selective attachment means for a hammock are combined into a singular mounting bracket having a hammock hook portion and a frame assembly's attachment portion. The hammock hook portion comprises a hook body having a hook bearing plate integrally formed to one end of said hook body, and a threaded opening extending from said hook bearing plate to within said hook body. The frame assembly's attachment portion comprises a frame assembly's bearing arm having a threaded attachment stem extending from one end of said frame assembly's bearing arm, the threads of said stem being complementary to the threads of the threaded opening of the hammock hook portion for threaded engagement therewith, and a frame assembly's bearing plate integrally formed at the opposite end of said frame assembly's bearing arm having a frame assembly's attachment portion turning knob integrally formed with said frame assembly's bearing plate.

An object of the present invention is to provide a portable support for a hammock.

It is also an object of the present invention to provide a collapsible hammock support having sun shading means.

A further object of this invention is to provide a hammock support having sun shading means that can be adjusted to various dispositions above the attached hammock.

Although such novel feature or features believed to be characteristic of the invention are pointed out in the claims, the invention and the manner in which it may be carried out, may be further understood by reference to the description following and the accompanying drawings.

BRIEF DESCRIPTION OF THE DRAWINGS

Referring now to the figures in greater detail, where like reference numbers denote like parts in the various figures.

FIG. **1** is a perspective view of the collapsible hammock support of the present invention.

FIG. **2** is a fragmented top plan view of the bracing member stud of the hammock shade support frame assembly.

FIG. **3** is a fragmented side plan view of the bracing member stud of the hammock shade support frame assembly.

FIG. **4** is a fragmented side plan view of the central portion of the longitudinal shade bracing member.

FIG. **5** is a top plan view of FIG. **4**.

FIG. **6** is a side plan view of the mounting bracket of the present invention.

FIG. **7** is a side plan view of the mounting bracket having the hammock support frame assembly and the hammock shade support frame assembly attached thereto.

FIG. **8** is a side plan view of an alternative embodiment of the mounting bracket.

FIG. **9** is a cross sectional view taken along lines **9**—**9** of FIG. **8**.

DESCRIPTION OF A PREFERRED EMBODIMENT

FIG. **1** illustrates in a perspective view the collapsible hammock support **10** of the present invention. A hammock **1** is shown in phantom lines as it would be disposed when attached to the hammock support **10**. Hammock support **10** generally comprises a collapsible, ground engaging hammock support frame assembly **20** and a hammock shade support frame assembly **30** pivotally attached to the upper portion of the hammock support frame assembly **20** by means of a mounting bracket **40**. A sunshade **50** is fixedly attached to the top of the hammock shade support frame assembly **30**.

Collapsible hammock support frame assembly **20** comprises a first A-shaped collapsible structure **21** and a second A-shaped collapsible structure **22** which are collapsibly interconnected by first and second longitudinal bracing members **23**, **24**. The respective first and second A-shaped structures **21**, **22** are formed by respective first and second tubular legs **21***a*, **21***b* and **22***a*, **22***b* having flat leg end members **21***c*, **22***c* which are pivotally attached to the mounting bracket **40** as hereinafter described in greater detail. Paired respective first and second transverse bracing members **21***d*, **22***d* are rotatably attached at the ends thereof to the respective first and second tubular legs **21***a*, **21***b* and **22***a*, **22***b*. Said first and second longitudinal bracing members **23**, **24** are respectively attached between each of the first tubular legs **21***a*, **21***b* of the first A-shaped structure **21** and the respective second tubular legs **22***a*, **22***b* of the second A-shaped structure **22** in rotatable attachment at the ends thereof.

Hammock shade support frame assembly **30** comprises a first tubular arm **31** and a second tubular arm **32** which are collapsibly interconnected by a longitudinal shade bracing member **33**, and a collapsible shade support subassembly **60** which supports the sun shade **50** in an outwardly extending position. The first and second tubular arms **31**, **32** are formed having respective flat

ClibPDF - www.fastio.com

upper and lower end members **31***a*, **32***a* and **31***b*, **32***b*. The lower end members **31***b*, **32***b* are pivotally attached to the mounting bracket **40**. The upper end members **31***a*, **32***a* have respective first and second shade bracing member studs **31***c*, **32***c* fixedly attached thereto, which are attached to the ends of the longitudinal shade bracing member **33**. As can be best seen in the fragmented top plan view and the fragmented side plan view of the first shade bracing member stud **31***c*, shown in FIGS. **2** and **3**, which is typical for said second shade bracing member stud **32***c*, said first shade bracing member stud **31***c* is a cylindrical member having a longitudinal stud slot **31***d* formed at the distal end thereof. An end portion **33***a* of the longitudinal shade bracing member **33** is rotatably received within the stud slot **31***d* and held therein by a stud dowel **31***e* which engages a slot formed in the first shade bracing member stud **31***c* and the shade bracing member end portion **33***a*.

Referring again to FIG. **1**, it can be seen that collapsible shade support subassembly **60** comprises paired respective first and second transverse shade support members **61***a*, **61***b* and **62***a*, **62***b* which are rotatably attached at one end thereof to the first and second shade bracing member studs **31***c*, **32***c*, said paired first and second transverse shade support members **61***a*, **61***b* and **62***a*, **62***b* being collapsibly interconnected by respective first and second shade support bracing members **63**, **64**. The sunshade **50** is formed, preferably from a flexible nylon fabric and is fixedly attached at respective ends thereof to the top portions of said paired first and second transverse shade support members **61***a*, **61***b* and **62***a*, **62***b*. Sunshade **50** may alternatively be selectively attachable to said transverse shade support members **61***a*, **61***b* and **62***a*, **62***b* by snap fastener means or the like.

FIG. **4** illustrates in a fragmented side plan view the central portion of the longitudinal shade bracing member **33** which is the typical construction for the several bracing members **21***d*, **22***d*, **23**, **24**, **63** and **64**. FIG. **5** is a top plan view of the shade bracing member **33** shown in FIG. **4**. Shade bracing member **33** generally comprises first and second shade bracing member portions **33***b*, **33***c*. First shade bracing member portion **33***b* is an elongated member having an engagement tab **33***d* formed at the centrally disposed end thereof. Second shade bracing member portion **33***c* is an elongated member having an engagement slot **33***e* formed at the centrally disposed end thereof. Engagement tab **33***d* engages engagement slot **33***e* when the first and second shade bracing member portions **33***b*, **33***c* are disposed in the fully braced position. First and second shade bracing members **33***b*, **33***c* are held in pivotable engagement by bracing pin **33***f*.

In the side plan view of the mounting bracket **40**, illustrated in FIG. **6**, it can be seen that mounting bracket **40** is a two part structure having a hammock hook portion **41** and a frame assembly's attachment portion **42**. Hammock hook portion **41** includes a hook body **41***a* having a convexly curved top surface **41***b* which receives a hammock **1** in detachable engagement (FIG. **1**). A hook bearing plate **41***c* is integrally formed to one side of the hook body **41***a*. A threaded opening **41***d* extends from the outside surface of the hook bearing plate **41***c* to within said hook body **41***a*. The threaded opening **41***d* is provided for threaded attachment of the frame assembly's attachment portion **42** to the hammock hook portion **41**. Frame assembly's attachment portion **42** is formed having a frame assembly's bearing arm **42***a*, a frame assembly's bearing plate **42***b* integrally formed at one side of the frame assembly's bearing arm **42***a*, a frame assembly's attachment portion turning knob **42***c* integrally formed at the opposite side of the frame assembly's bearing plate **42***b*, and a threaded attachment stem **42***d* fixedly attached to the opposite side of the frame assembly's bearing arm **42***a*, the threads of said attachment stem **42***d* being complementary to the threads of said opening **41***d* formed in the hook body **41***a* for threaded engagement therein.

FIG. **7** illustrates in a side plan view the attachment of the first tubular arm **31** of the hammock shade support frame assembly **30** and the respective first and second tubular legs **21***a*, **21***b* of the first A-shaped structure **21** to the mounting bracket **40**. The respective tubular arm **31** and tubular legs **21***a*, **21***b* include openings (not shown) formed in the respective lower end member **31***b* of the tubular arm **31** and the end members **21***c* of the first tubular legs **21***a*, **21***b* which receives in rotatable engagement the frame assembly's bearing arm **42***a*. The lower end member **31***b* of the tubular arm **31** is shown disposed between the end members **21***c* of the respective first tubular legs **21***a*, **21***b*; however, they may be attached to frame assembly's bearing arm **42***a* in any order.

To understand the collapsible and adjustable operation of the hammock support **10** of the present invention, reference is now made to FIG. **1** where the hammock support **10** is shown in its upright and braced position. The hammock shade support frame assembly **30** is held upright by the tight bearing engagement of the lower end member **31***b* of tubular arm **31** between the hook bearing plate **41***c* and the frame assembly's bearing plate **42***b* of the mounting bracket **40**. The hammock shade support frame assembly **30** may be adjusted laterally to various positions by first loosening the frame assembly's attachment portion **42** of the mounting bracket **40** from the hammock hook portion **41** by rotating the turning knob **42***c*. Then the hammock shade support frame assembly **30** is repositioned as desired and the turning knob **42***c* is rotated in the opposite direction to hold the shade support frame assembly **30** in the new position. Thereby, the sunshade **50** can be oriented to guard against the sun in various positions of the sky or moved as the sun moves across the sky.

To collapse the hammock support **10** for transporting it to and from a beach or like area, the frame assembly's attachment portion **42** is loosened by rotation of the turning knob **42***c* and the central portion of the first and second transverse bracing members **21***d*, **22***d* are rotated to bring the first and second tubular legs **21***a*, **21***b* of the respective first and second A-shaped structures **21**, **22** toward each other. The first and second shade support bracing members **63**, **64** are likewise rotated to bring the respective paired first and second transverse shade support members **61***a*, **61***b* and **62***a*, **62***b* toward each other. The first and second tubular arms **31**, **32** are then rotated about the frame assembly's bearing arm **42***a* to bring the hammock shade support frame assembly **30** adjacent to the hammock support frame assembly **20**. The respective first and second longitudinal bracing members **23**, **24** of the hammock support frame assembly **20** and the longitudinal shade bracing member **33** of the hammock shade support frame assembly **30** are rotated to bring the first and second A-shaped structures **21**, **22** and the first and second tubular arms **31**, **32** toward each other, thereby collapsing the entire hammock support **10**. The turning knob **42***c* is then tightened to hold the hammock support frame assembly **20**

ClibPDF - www.fastio.com

and the hammock shade support frame assembly **30** in the collapsed position. It is preferred that the hammock **1** be detached from the hammock support **10** before collapsing it for transportation; however, hammock support **10** may be collapsed with the hammock **1** remaining attached. The hammock support **10** is set up in the upright position by reversing the steps described in the foregoing.

An alternative embodiment of the frame assembly's attachment portion **421** of the mounting bracket **40** and a complementary tubular arm **311** of the hammock shade support frame assembly **30** are shown in FIGS. **8** and **9**. The alternative frame assembly's attachment portion **421** includes a selectively releasble finger **43** which includes a release button **43***a* and a finger extension **43***b*. The finger extension **43***b* is selectively moved transversely through the turning knob **42***c* by operation of the release button **43***a*, as known in the prior art, between a "release" position indicated by the numeral **44** and shown in shaded lines and a "lock" position indicated by the numeral **45** and shown in solid lines. In the "lock" position **45**, the finger extension **43***b* engages a lock slot **31***f* formed in the lower end member **31***b* of the tubular arm **31**, thereby locking the hammock shade support frame assembly **30** in an upright position.

The terms and expressions which are employed are used as terms of description; it is recognized, though, that various modifications are possible.

It is also understood that the following claims are intended to cover all of the generic and specific features of the invention herein described, and all statements of the scope of the invention which, as a matter of language, might fall therebetween.

Having described certain forms of the invention in some detail, what is claimed is:

1. An interconnected collapsible transportable hammock support including sunshade means comprising,

an interconnected collapsible ground engaging hammock support frame assembly; comprising first and second A-shaped collapsible structures formed by respective first and second tubular legs having flat end members; and transverse bracing members being rotatably attached at ends thereof to the respective first and second tubular legs of the respective first and second A-shaped structures,

an interconnected collapsible hammock shade support frame assembly,

a flexible collapsible sunshade attached to said hammock shade support frame assembly,

means to interconnectedly and pivotally attach said hammock shade support frame assembly to said hammock support frame assembly,.

means for selective attachment of a hammock to said hammock support, said means for selective attachment of a hammock to said hammock support comprising a mounting bracket having a hammock hook portion and a frame assembly's attachment portion.

2. A collapsible hammock support as in claim **1** wherein said sunshade is fixedly attached to said hammock shade support frame assembly.

3. A collapsible hammock support as in claim **1** wherein said sunshade is selectively attachable to said hammock shade support frame assembly.

4. A collapsible hammock support as in claim **1** wherein said sunshade is formed from a length of nylon material.

5. A collapsible hammock support as in claim **1** wherein said hammock shade support frame assembly comprises a first tubular arm and a second tubular arm formed having respective flat upper and lower end members, the upper end members having respective first and second shade bracing member studs fixedly attached thereto, said bracing member studs receiving in pivotal engagement a longitudinal shade bracing member and receiving in rotatable engagement a collapsible shade support subassembly, said first tubular arm and said second tubular arm being collapsibly interconnected by said longitudinal shade bracing member.

6. A collapsible hammock support as in claim **5** wherein said shade support subassembly comprises paired respective first and second transverse shade support members rotatably attached at one end thereof to said first and second shade bracing member studs, said paired first and second transverse shade support members being collapsibly interconnected by respective first and second shade support bracing members, said sunshade being attached at respective ends thereof to top portions of said first and second transverse shade support members.

7. A collapsible hammock support a in claim **6** wherein said means to pivotally attach said hammock shade support frame assembly to said hammock support frame assembly and said means for selective attachment of a hammock to said hammock support comprises a mounting bracket having a hammock hook portion and a frame assembly's attachment portion.

8. A collapsible hammock support as in claim **7** wherein said hammock hook portion comprises

a hook body having a convexly curved top surface, a hook bearing plate integrally formed at one side of said hook body, and a threaded opening extending from the outside surface of said hook bearing plate to within said hook body; and wherein said frame assembly's attachment portion comprises

a frame assembly's bearing arm, a frame assembly's bearing plate integrally formed at one side of said frame assembly's bearing arm, a turning knob integrally formed at the opposite side of the frame assembly's bearing plate, and a threaded attachment stem fixedly attached to the opposite side of the frame assembly's bearing arm;

said attachment stem being threadedly receivable in said threaded opening.

9. A collapsible hammock support as in claim **8** including means to interlock said hammock shade support frame assembly and said hammock support mounting assembly.

* * * * *

ClibPDF - www.fastio.com